SUB-ATMOSPHERISK, SPRING OG DOME LOADED, DIAPHRAGM SENSOR

DA Serien Trykreducerende regulator

DA-1
DA Serien

- Max indgangstryk: 310 bar
- Max udgangstryk: 24.1 bar
- Temperaturområde: -25 til 60°C
- CV: 0.06
- Leak: Bubble-tight

PRODUKTBESKRIVELSE

Tescom DA Serien

absolute trykreducerende regulator som er designet med en elastomer diaphragm og som giver en nøjagtighed på +/- 0.007 bar. Denne regulator kan bruges til at reducere trykket fra en supply kilde op til 310 bar til vakuum.

Applikationer

- Instrumentation testing
- Calibration equipment

Fordele

Kompakt og meget nøjagtig
Prisvenlig
Hurtig tilbagemelding og nøjagtig diaphragm type regulation
Optimal repeatability
Non-venting
Lav operating handknob torque
Tilgængelig i "Captured bonnet"
Tilgængelig som Panel montering
Flere muligheder for porting, body materialer og soft goods

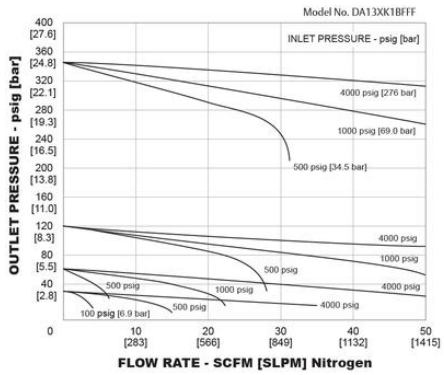

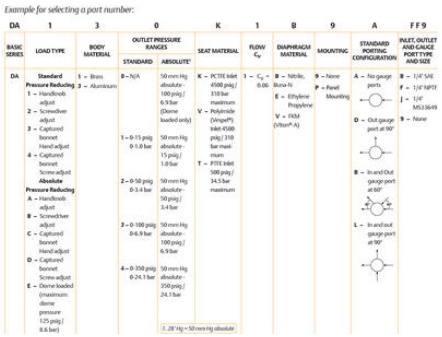

Example for selecting a part number:

DA	1	3	0		K	1	B	9	A	F F 9
BASIC SERIES	LOAD TYPE	BODY MATERIAL	OUTLET PRESSURE RANGES STANDARD	OUTLET PRESSURE RANGES ABSOLUTE*	SEAT MATERIAL	FLOW C_v	DIAPHRAGM MATERIAL	MOUNTING	STANDARD PORTING CONFIGURATION	INLET, OUTLET AND GAUGE PORT TYPE AND SIZE
DA	**Standard Pressure Reducing** 1 – Handknob adjust 2 – Screwdriver adjust 3 – Captured bonnet Hand adjust 4 – Captured bonnet Screw adjust **Absolute Pressure Reducing** A – Handknob adjust B – Screwdriver adjust C – Captured bonnet Hand adjust D – Captured bonnet Screw adjust E – Dome loaded (maximum dome pressure 125 psig / 8.6 bar)	1 – Brass 2 – Aluminum	0 – N/A 1 – 0-15 psig 0-1.0 bar 2 – 0-50 psig 0-3.4 bar 3 – 0-100 psig 0-6.9 bar 4 – 0-350 psig 0-24.1 bar	50 mm Hg absolute-100 psig / 6.9 bar (Dome loaded only) 50 mm Hg absolute-15 psig / 1.0 bar 50 mm Hg absolute-50 psig / 3.4 bar 50 mm Hg absolute-100 psig / 6.9 bar 50 mm Hg absolute-350 psig / 24.1 bar *1 .28" Hg = 50 mm Hg absolute	K – PCTFE Inlet 4500 psig / 310 bar maximum V – Polyimide (Vespel®) Inlet 4500 psig / 310 bar maximum T – PTFE Inlet 500 psig / 34.5 bar maximum	1 – C_v = 0.06	B – Nitrile, Buna-N E – Ethylene Propylene V – FKM (Viton®-A)	9 – None P – Panel Mounting	A – No gauge ports D – Out gauge port at 90° B – In and Out gauge port at 60° L – In and out gauge port at 90°	B – 1/4" SAE F – 1/4" NPTI J – 1/4" MS33649 9 – None

P/N's DA1X, DA3X, DAAX, DACX

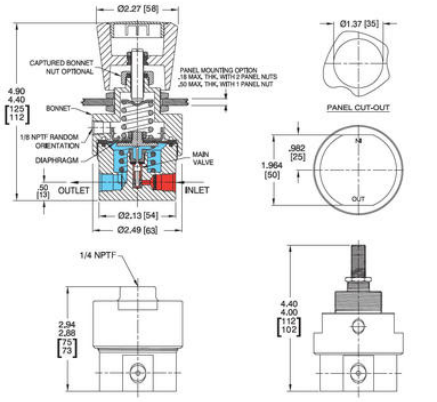

P/N DAEX

P/N's DA2X, DA4X, DABX, DADX